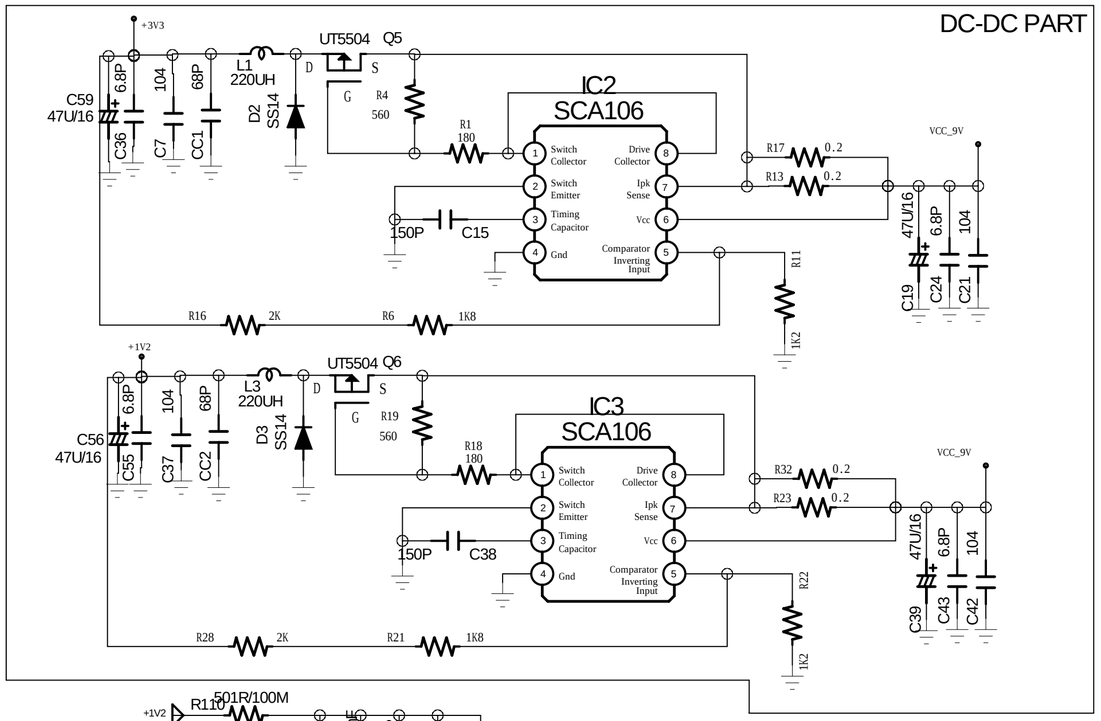


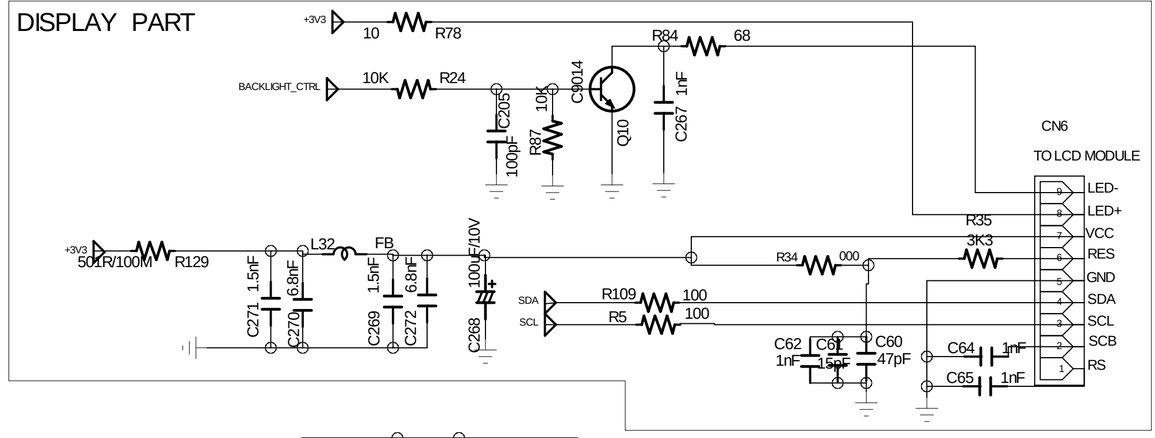


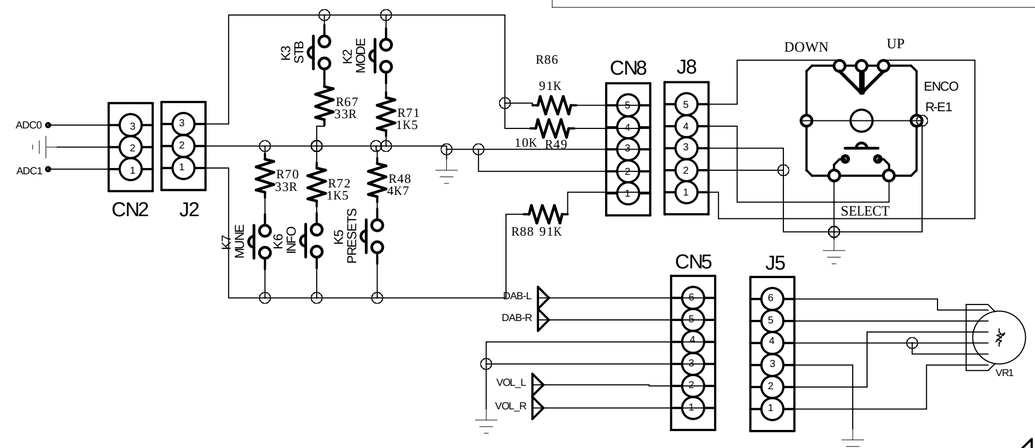


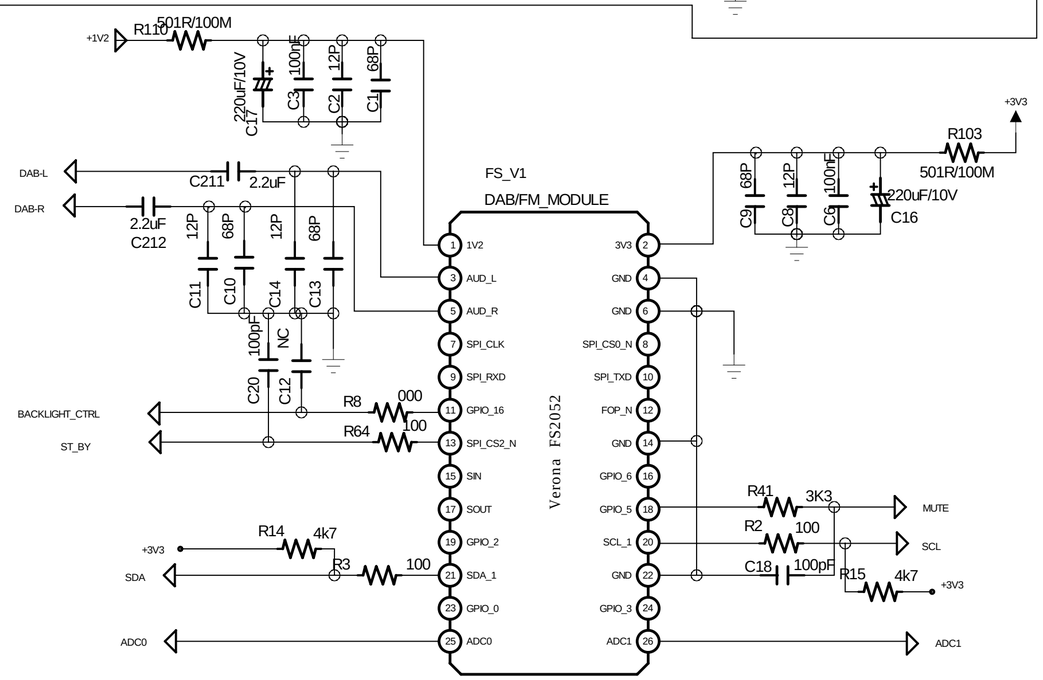


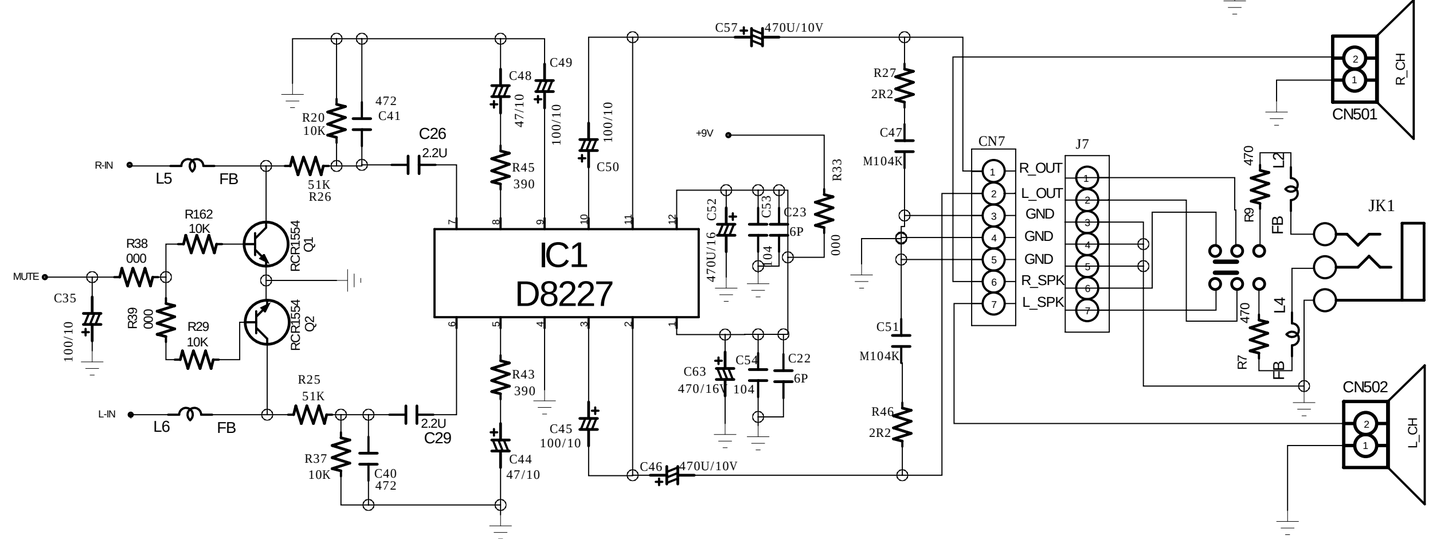


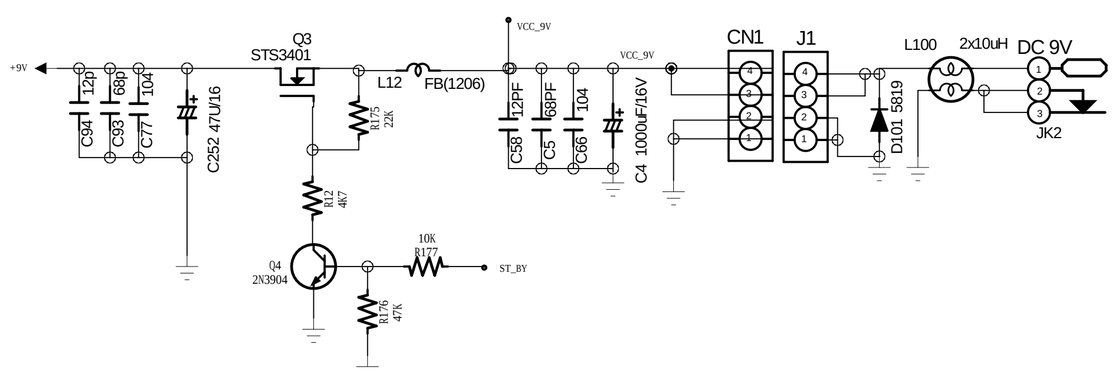


| DATE: 2011-07-05 | Rev: 0.1 | Sheet: 1 OF 1 |
|---|---|---|